Foulger Consulting

**1025 Paradise Way**
**Palo Alto, CA 943062637, USA**
**Tel: 650/4932553**
**Cell: 650/9968886**
**FAX: 866/5326907**
**gillian@foulgerconsulting.com**
**http://www.foulgerconsulting.com/**

October 15, 2014

# WEEKLY REPORT #2 TO ALTAROCK ENERGY INC.

# PROCESSING OF INDUCED EARTHQUAKES ASSOCIATED WITH THE NEWBERRY EGS INJECTION STARTING SEPTEMBER 2014

**GILLIAN R. FOULGER & BRUCE R. JULIAN**

*Brief summary*

*There are still some problems transferring data and working on these occupied considerable time during the last week. We derived an additional five moment tensors, most of which showed small to moderate volumetric components, approximately equally divided between crack-opening and crack-closing.*

*Plots of the different sets of locations available to date show systematic differences between the locations produced by different computer programs. Most events lie within a circle about 500 m in diameter and centered 100 to 200 m north of the bottom of well NWD 55-29. The most accurate absolute locations available to date are from the 15 events for which moment tensors have been derived. These events cluster tightly around the bottom of the well in the depth range 700 - 1200 m b.s.l.*

*There may be a tendency for the earthquakes to shallow slightly with time. This is apparent depth plots of both the entire catalog, and the moment-tensor events.*

# 1 Task 1 – Planning, conference calls, discussion of work, correspondence, followup

We continued to maintain close communication with other team members, primarily ISTI (Paul Friberg and others) as we worked to smooth the initial glitches in data formats and completeness. Moment tensor work was suspended for a few days as we awaited resolution of the remaining issues. Some problems still remain, on which we continue to work. Moment tensor analysis was resumed when it became clear that the problems would take more than two or three days to sort out.

# 2 Task 2 – System Setup

Significant progress was made in setting up a relative relocation workflow, including focus on relative relocation work, planned for the forthcoming week.

# 3 Task 3 – Quality control of prepicked MEQs and preparation for relocation and moment tensor calculation

We continued to derive moment tensors for the largest earthquakes, adding events to our working list as events were recorded day by day. We used the same procedure as described in our Weekly Report #1. We report here an additional five moment tensors. The entire list of earthquakes processed to date is given in Table 1. Full location files, in the format given in Weekly Report #1, Appendix 1, will be provided on request.

Table 1: The 15 earthquakes for which moment tensors have obtained. Locations given below are from the webpage http://fracture.lbl.gov/Newberry/locations.txt.

| yr | jday | month | day | hour | minute | sec | lat | lon | depth | magnitude |
|---|---|---|---|---|---|---|---|---|---|---|
| 2014 | 273 | 9 | 30 | 21 | 30 | 43.689 | 43.72667 | 121.313 | 0.387 | **0.972** |
| 2014 | 274 | 10 | 1 | 1 | 3 | 14.64 | 43.7239 | 121.30957 | 0.714 | **0.987** |
| 2014 | 274 | 10 | 1 | 12 | 3 | 16.881 | 43.72658 | 121.3158 | 1.587 | **1.086** |
| 2014 | 274 | 10 | 1 | 14 | 53 | 5.102 | 43.72545 | 121.31355 | 0.613 | **1.381** |
| 2014 | 274 | 10 | 1 | 19 | 5 | 16.377 | 43.72662 | 121.31117 | 0.517 | **1.259** |
| 2014 | 275 | 10 | 2 | 6 | 47 | 52.916 | 43.72632 | 121.31322 | 1.323 | **1.117** |
| 2014 | 275 | 10 | 2 | 7 | 7 | 11.646 | 43.72488 | 121.31192 | 0.708 | **1.378** |
| 2014 | 275 | 10 | 2 | 11 | 1 | 48.042 | 43.72567 | 121.31168 | 0.666 | **1.22** |
| 2014 | 276 | 10 | 3 | 6 | 6 | 22.727 | 43.72528 | 121.31493 | 0.928 | **1.157** |
| 2014 | 276 | 10 | 3 | 18 | 54 | 54.199 | 43.72678 | 121.31125 | 0.647 | **1.021** |
| 2014 | 277 | 10 | 4 | 5 | 29 | 8.347 | 43.72578 | 121.31068 | 0.946 | **0.922** |
| 2014 | 277 | 10 | 4 | 17 | 32 | 52.716 | 43.72207 | 121.31693 | 0.376 | **1.521** |
| 2014 | 277 | 10 | 4 | 18 | 51 | 11.991 | 43.72295 | 121.31227 | 0.496 | **1.97** |
| 2014 | 278 | 10 | 5 | 4 | 7 | 30.446 | 43.725 | 121.31322 | 0.659 | **1.696** |
| 2014 | 278 | 10 | 5 | 23 | 22 | 16.638 | 43.72368 | 121.3116 | 1.055 | **0.931** |

Of the five new moment tensors, two are significantly implosive, two significantly explosive, and one (the event of Oct 5 23:22) has no significant volumetric component.

## 4 Task 4 –Improved locations and relative locations

Relative locations of all the earthquakes in the ISTI catalog is currently in hand and we expect to have preliminary results within a few days. In preparation for this, we developed a plotting script and have examined the absolute locations available within the team so far.

Figure 1 shows LBNL locations. There is great scatter in these locations.

Figure 2 shows ISTI arrival-time measurements used to locate the earthquakes using **qloc**, the location program used by *Foulger Consulting*. Most events lie within a circle about 500 m in diameter and centered 100 to 200 m north of the bottom of well NWD 55-29.

Figure 3 shows ISTI locations derived using one of the **hypo** generation of location programs.

Significant differences can be seen between these last two sets of locations, simply when different programs are used.

Figure 4 shows the locations of the MEQs for which moment tensors were derived. These earthquakes are the largest and best-located, have been subject to the most careful processing and outlier-rejection, and are the most accurately located earthquakes available to date.

Figure 5 shows the depth as a function of time. The average depth appears to be decreasing slightly, and deeper events are reducing in number with time.

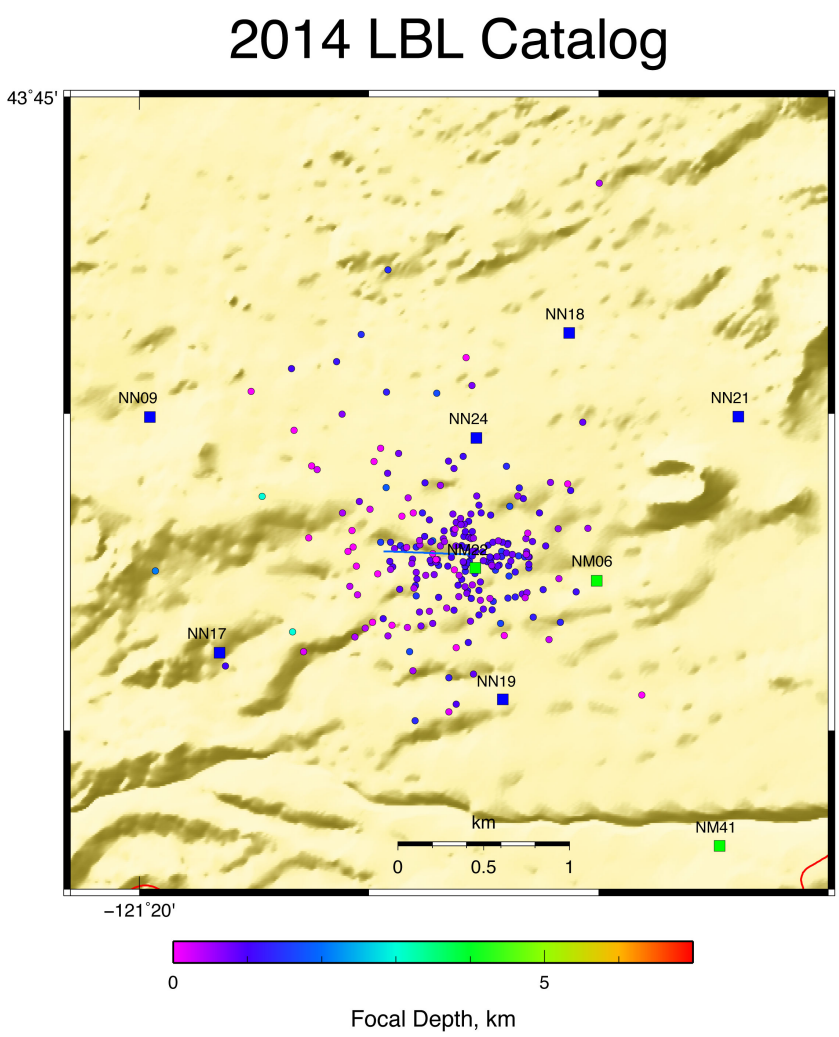


Figure 1: Estimated hypocenters of 228 MEQs between Sept. 28 and Oct. 15, 2014 within the NMSA network, as given in the earthquake catalog of the Lawrence Berkeley Laboratory. These locations are significantly more scattered than those shown in Figure 2 and Figure 3, probably because of differences in either the method of measuring seismic-wave arrival times or of

inverting them to determine hypocenter locations. Blue line: well NWD 55-29; green squares: surface seismometers; blue squares: borehole seismometers.

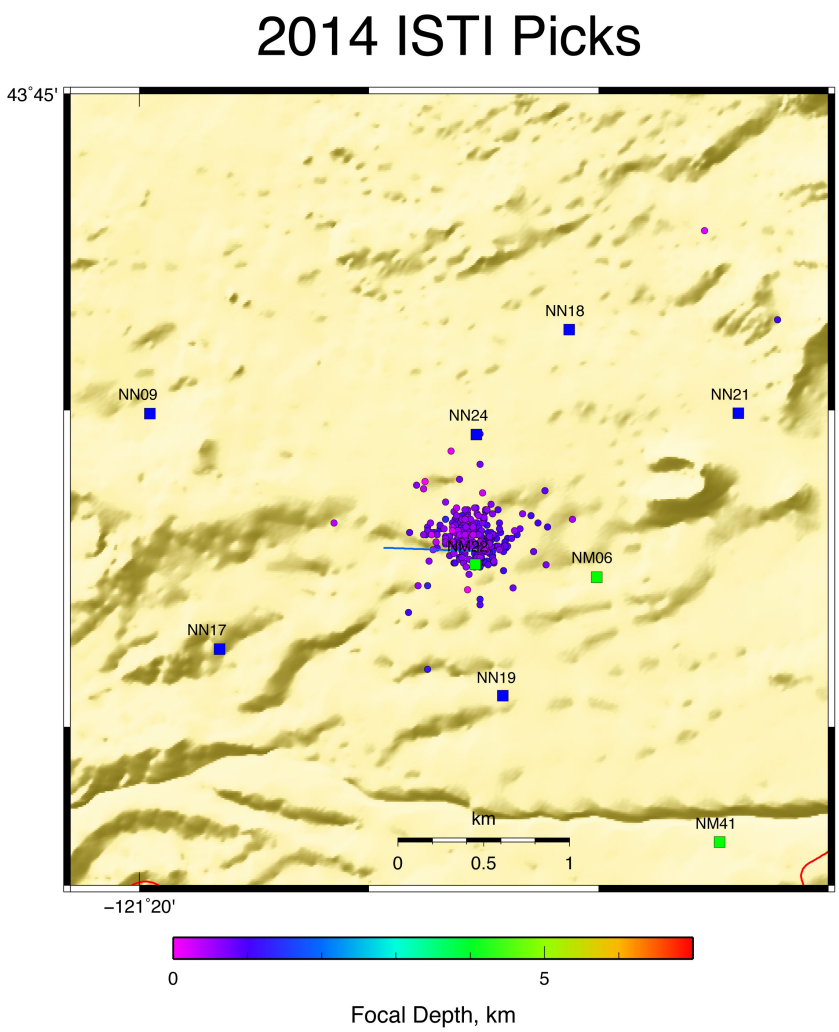


Figure 2: Estimated hypocenters of 257 MEQs between Sept. 26 and Oct. 13, 2014 within the NMSA network. Most events lie within a circle about 500 m in diameter and centered 100 to 200 m north of the bottom of well NWD 55-29, which is shown in blue. These locations were obtained by using the **qloc** program to invert *P*- and *S*-phase arrival times measured by ISTI on digital seismograms from the NMSA network. Figure 5 shows the focal depths of these events as a function of time.

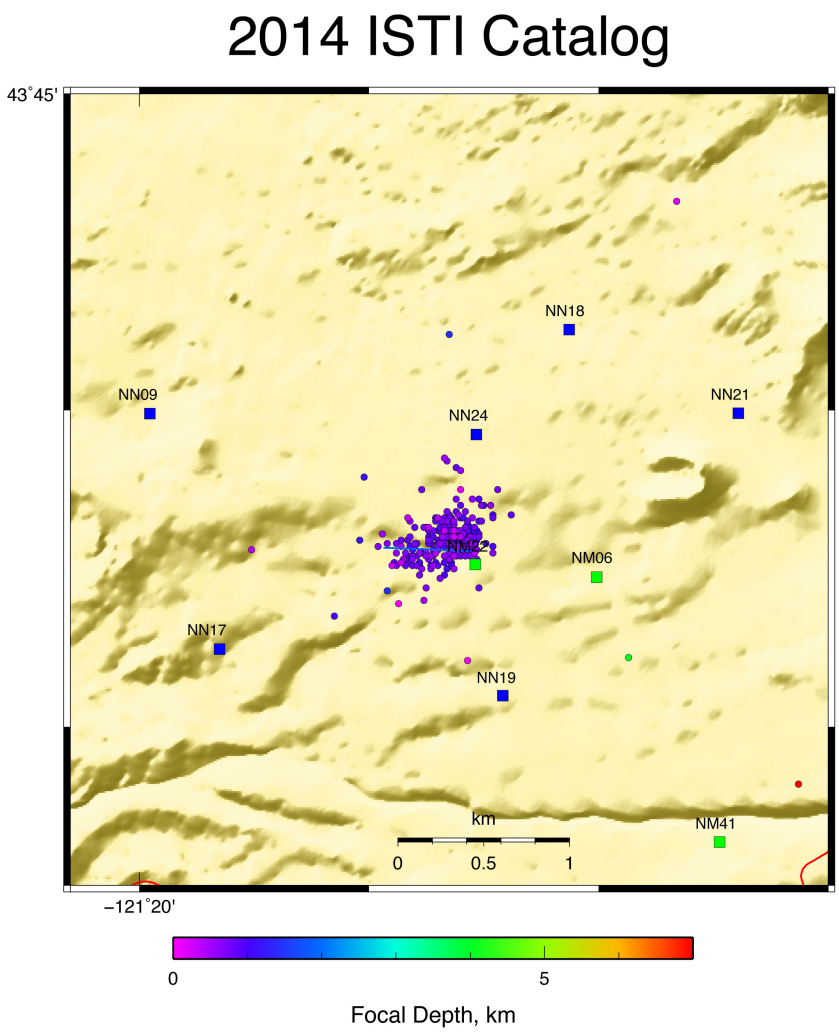


Figure 3: Estimated hypocenters of 263 MEQs between Sept. 26 and Oct. 14, 2014 within the NMSA network, as given in the earthquake catalog of the ISTI Corporation. These locations are slightly but significantly west of those shown in Figure 2, which were derived from substantially the same seismic data but using a different computer program. Well NWD 55-29 is shown in blue.

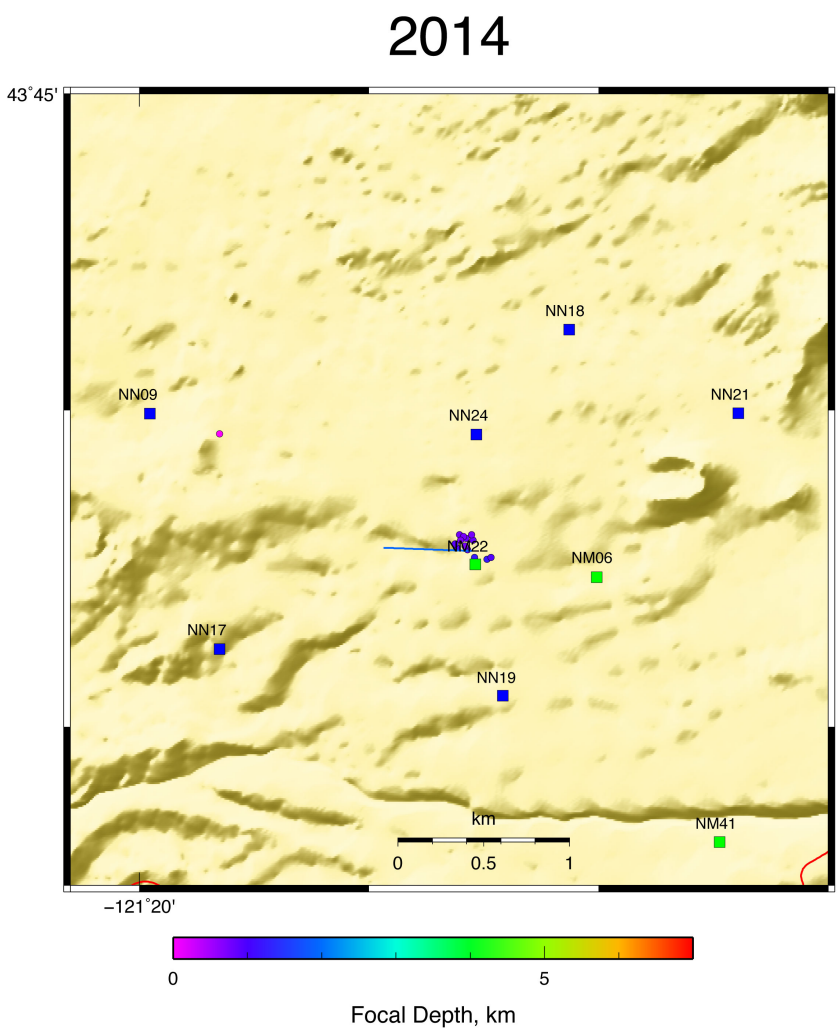


Figure 4: Map showing the locations of the fifteen earthquakes for which moment tensors have been derived. These events have been very carefully processed, including identifying the correct *S*-wave arrivals by filtering, measuring their arrival times on both horizontal components rotated toward the source, and rejecting outliers.

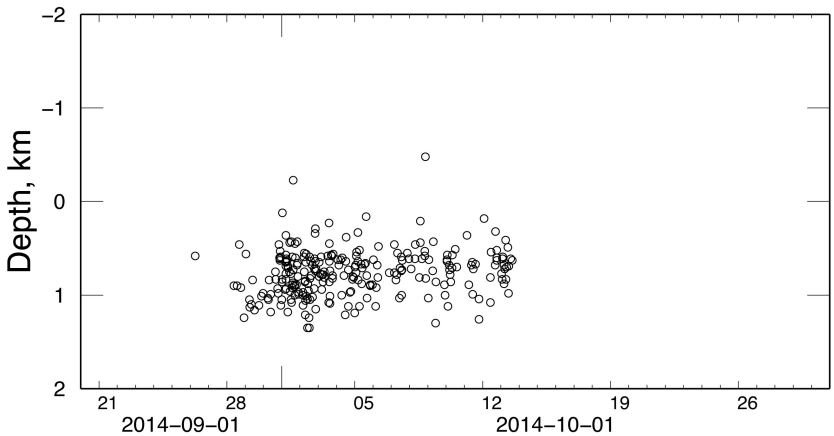


Figure 5: Estimated depths, with respect to sea level, of 257 MEQs within the NMSA network as a function of time. The average depth appears to be decreasing slightly with time because of a decrease in the number of deeper events. These depths were obtained by using the **qloc** program to invert *P*- and *S*-phase arrival times measured by ISTI on digital seismograms from the NMSA network.

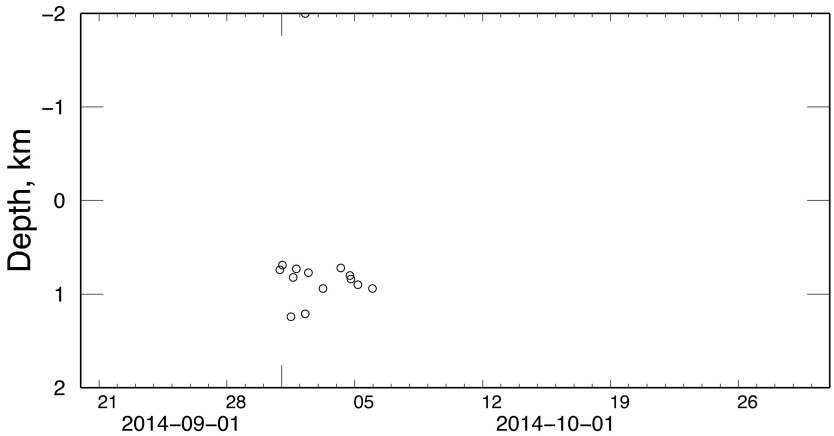


Figure 6: Same as Figure 5 except for the 15 MEQs for which moment tensors were derived.

## 5 Task 5 Moment tensor calculations

Moment tensors were derived for an additional five earthquakes using the same procedure as described in Weekly Report #1. There is no shortage of events that yield good or excellent results. The numerical results of the catalog to date are given in

Table 2. Graphical results are shown in

Appendix 1.

We continue to work on checking the calibration of the sensors, and the results given here should be considered preliminary.

Table 2: Numerical moment tensor results for the 15 MEQs studied to date.

| | | | | | | | | | | | | |
|---|---|---|---|---|---|---|---|---|---|---|---|---|
| 1.578e-01 | 3.466e-02 | 6.671e-02 | 2.482e-01 | 6.317e-02 | 8.338e-02 | 2014 | 10 | 01 | 14 | 53 | 05.23 | excellent |
| 2.172e-01 | -3.673e-02 | -6.417e-02 | 2.346e-01 | 7.204e-02 | 3.184e-02 | 2014 | 10 | 01 | 19 | 05 | 16.54 | excellent |
| 8.713e-02 | 1.262e-01 | -4.193e-02 | 1.814e-01 | 8.429e-02 | 8.722e-02 | 2014 | 10 | 04 | 18 | 51 | 12.00 | excellent |
| -1.029e-01 | 1.325e-01 | -1.185e-01 | 1.480e-01 | 5.508e-02 | 1.074e-01 | 2014 | 10 | 04 | 17 | 32 | 52.76 | excellent |
| -1.165e-01 | 1.705e-01 | -1.989e-01 | 1.394e-01 | -2.430e-02 | 1.639e-02 | 2014 | 10 | 02 | 07 | 07 | 04.16 | excellent |
| 2.406e-01 | -7.298e-02 | -9.789e-02 | 1.731e-01 | 4.297e-02 | 8.349e-02 | 2014 | 10 | 02 | 11 | 01 | 42.38 | excellent |
| -1.461e-02 | 9.643e-02 | -3.978e-01 | 2.595e-02 | 1.691e-01 | -4.693e-03 | 2014 | 10 | 02 | 06 | 47 | 52.94 | excellent |
| 6.066e-03 | -2.231e-01 | -9.157e-02 | 1.941e-01 | 3.367e-02 | -6.184e-04 | 2014 | 10 | 03 | 06 | 06 | 22.76 | excellent |
| -5.772e-02 | -1.655e-01 | -1.427e-01 | 1.464e-01 | 7.811e-02 | -1.952e-02 | 2014 | 10 | 03 | 18 | 54 | 53.93 | fair |
| 2.004e-01 | -1.410e-01 | -1.461e-01 | 1.400e-01 | -8.713e-03 | 7.412e-02 | 2014 | 10 | 01 | 12 | 03 | 16.94 | good |
| 5.304e-02 | 6.783e-02 | -1.175e-01 | 1.615e-01 | 7.508e-02 | 2.206e-01 | 2014 | 10 | 05 | 04 | 07 | 20 | excellent |
| -1.777e-01 | -1.053e-01 | -1.512e-01 | 7.111e-02 | 1.063e-01 | 1.057e-01 | 2014 | 10 | 01 | 01 | 03 | 14.49 | excellent |
| -2.667e- | 1.320e-01 | -6.399e- | 6.063e-02 | 1.031e-01 | 7.787e-02 | 2014 | 09 | 30 | 21 | 30 | 43.503 | excellent |

| | | | | | | | | | | | | |
|---|---|---|---|---|---|---|---|---|---|---|---|---|
| 01 | | 02 | | | | | | | | | | |
| -1.871e-01 | 8.995e-02 | -9.473e-02 | -1.446e-01 | -2.491e-02 | 1.992e-01 | 2014 | 10 | 05 | 23 | 22 | 16.499 | good |
| 1.684e-01 | -3.350e-02 | -9.826e-03 | 2.952e-01 | 3.542e-02 | 9.350e-02 | 2014 | 10 | 04 | 05 | 29 | 08.258 | fair |

## 6 Brief summary statement

There are still some problems transferring data and working on these occupied considerable time during the last week. We derived an additional five moment tensors, most of which showed small to moderate volumetric components, approximately equally divided between crack-opening and crack-closing.

Plots of the different sets of locations available to date show systematic differences between the locations produced by different computer programs. Most events lie within a circle about 500 m in diameter and centered 100 to 200 m north of the bottom of well NWD 55-29. The most accurate absolute locations available to date are from the 15 events for which moment tensors have been derived. These events cluster tightly around the bottom of the well in the depth range 700 - 1200 m b.s.l.

There may be a tendency for the earthquakes to shallow slightly with time. This is apparent depth plots of both the entire catalog, and the moment-tensor events.

Appendix 1: The addition five moment tensors derived over the previous week.

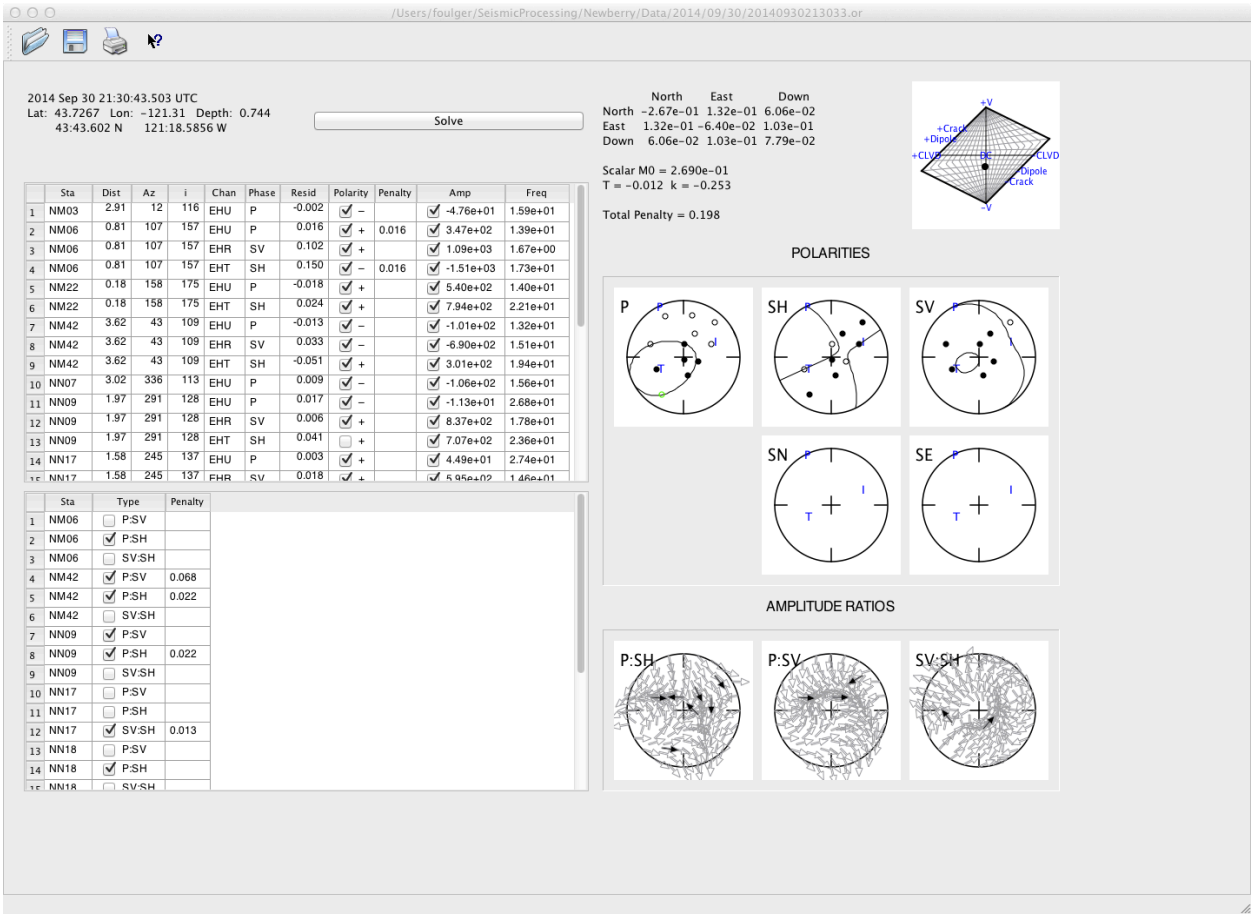


| | Sta | Dist | Az | i | Chan | Phase | Resid | Polarity | Penalty | Amp | Freq |
|---|---|---|---|---|---|---|---|---|---|---|---|
| 1 | NM03 | 2.91 | 12 | 116 | EHU | P | -0.002 | ✓ − | | ✓ -4.76e+01 | 1.59e+01 |
| 2 | NM06 | 0.81 | 107 | 157 | EHU | P | 0.016 | ✓ + | 0.016 | ✓ 3.47e+02 | 1.39e+01 |
| 3 | NM06 | 0.81 | 107 | 157 | EHR | SV | 0.102 | ✓ + | | ✓ 1.09e+03 | 1.67e+00 |
| 4 | NM06 | 0.81 | 107 | 157 | EHT | SH | 0.150 | ✓ − | 0.016 | ✓ -1.51e+03 | 1.73e+01 |
| 5 | NM22 | 0.18 | 158 | 175 | EHU | P | -0.018 | ✓ + | | ✓ 5.40e+02 | 1.40e+01 |
| 6 | NM22 | 0.18 | 158 | 175 | EHT | SH | 0.024 | ✓ + | | ✓ 7.94e+02 | 2.21e+01 |
| 7 | NM42 | 3.62 | 43 | 109 | EHU | P | -0.013 | ✓ − | | ✓ -1.01e+02 | 1.32e+01 |
| 8 | NM42 | 3.62 | 43 | 109 | EHR | SV | 0.033 | ✓ − | | ✓ -6.90e+02 | 1.51e+01 |
| 9 | NM42 | 3.62 | 43 | 109 | EHT | SH | -0.051 | ✓ + | | ✓ 3.01e+02 | 1.94e+01 |
| 10 | NN07 | 3.02 | 336 | 113 | EHU | P | 0.009 | ✓ − | | ✓ -1.06e+02 | 1.56e+01 |
| 11 | NN09 | 1.97 | 291 | 128 | EHU | P | 0.017 | ✓ − | | ✓ -1.13e+01 | 2.68e+01 |
| 12 | NN09 | 1.97 | 291 | 128 | EHR | SV | 0.006 | ✓ + | | ✓ 8.37e+02 | 1.78e+01 |
| 13 | NN09 | 1.97 | 291 | 128 | EHT | SH | 0.041 | ☐ + | | ✓ 7.07e+02 | 2.36e+01 |
| 14 | NN17 | 1.58 | 245 | 137 | EHU | P | 0.003 | ✓ + | | ✓ 4.49e+01 | 2.74e+01 |
| 15 | NN17 | 1.58 | 245 | 137 | EHR | SV | 0.018 | ✓ + | | ✓ 5.95e+02 | 1.46e+01 |

| | Sta | Type | Penalty |
|---|---|---|---|
| 1 | NM06 | ☐ P:SV | |
| 2 | NM06 | ✓ P:SH | |
| 3 | NM06 | ☐ SV:SH | |
| 4 | NM42 | ✓ P:SV | 0.068 |
| 5 | NM42 | ✓ P:SH | 0.022 |
| 6 | NM42 | ☐ SV:SH | |
| 7 | NN09 | ✓ P:SV | |
| 8 | NN09 | ✓ P:SH | 0.022 |
| 9 | NN09 | ☐ SV:SH | |
| 10 | NN17 | ☐ P:SV | |
| 11 | NN17 | ☐ P:SH | |
| 12 | NN17 | ✓ SV:SH | 0.013 |
| 13 | NN18 | ☐ P:SV | |
| 14 | NN18 | ✓ P:SH | |
| 15 | NN18 | ☐ SV:SH | |

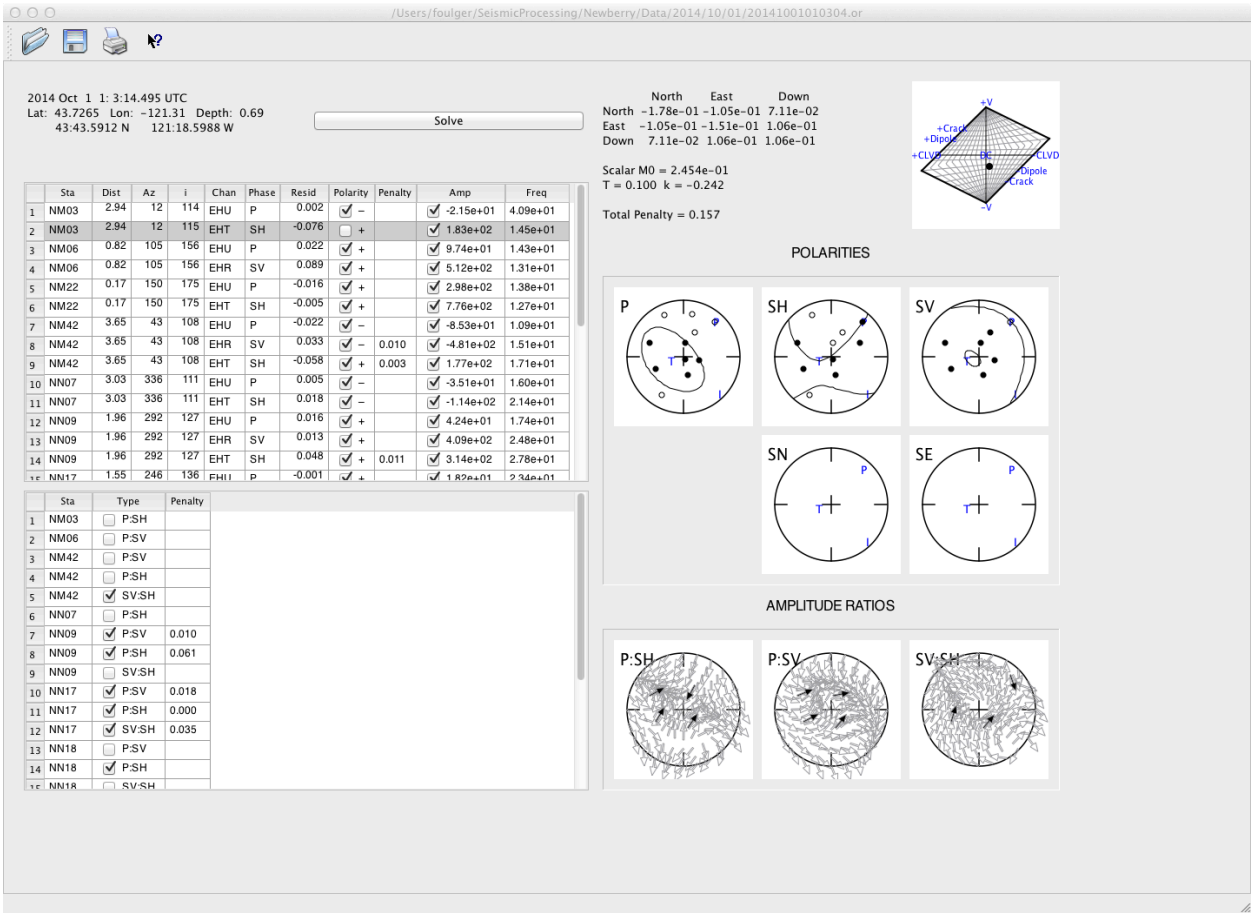


| | Sta | Dist | Az | i | Chan | Phase | Resid | Polarity | Penalty | Amp | Freq |
|---|---|---|---|---|---|---|---|---|---|---|---|
| 1 | NM03 | 2.94 | 12 | 114 | EHU | P | 0.002 | ✓ – | | ✓ -2.15e+01 | 4.09e+01 |
| 2 | NM03 | 2.94 | 12 | 115 | EHT | SH | -0.076 | ☐ + | | ✓ 1.83e+02 | 1.45e+01 |
| 3 | NM06 | 0.82 | 105 | 156 | EHU | P | 0.022 | ✓ + | | ✓ 9.74e+01 | 1.43e+01 |
| 4 | NM06 | 0.82 | 105 | 156 | EHR | SV | 0.089 | ✓ + | | ✓ 5.12e+02 | 1.31e+01 |
| 5 | NM22 | 0.17 | 150 | 175 | EHU | P | -0.016 | ✓ + | | ✓ 2.98e+02 | 1.38e+01 |
| 6 | NM22 | 0.17 | 150 | 175 | EHT | SH | -0.005 | ✓ + | | ✓ 7.76e+02 | 1.27e+01 |
| 7 | NM42 | 3.65 | 43 | 108 | EHU | P | -0.022 | ✓ – | | ✓ -8.53e+01 | 1.09e+01 |
| 8 | NM42 | 3.65 | 43 | 108 | EHR | SV | 0.033 | ✓ – | 0.010 | ✓ -4.81e+02 | 1.51e+01 |
| 9 | NM42 | 3.65 | 43 | 108 | EHT | SH | -0.058 | ✓ + | 0.003 | ✓ 1.77e+02 | 1.71e+01 |
| 10 | NN07 | 3.03 | 336 | 111 | EHU | P | 0.005 | ✓ – | | ✓ -3.51e+01 | 1.60e+01 |
| 11 | NN07 | 3.03 | 336 | 111 | EHT | SH | 0.018 | ✓ – | | ✓ -1.14e+02 | 2.14e+01 |
| 12 | NN09 | 1.96 | 292 | 127 | EHU | P | 0.016 | ✓ + | | ✓ 4.24e+01 | 1.74e+01 |
| 13 | NN09 | 1.96 | 292 | 127 | EHR | SV | 0.013 | ✓ + | | ✓ 4.09e+02 | 2.48e+01 |
| 14 | NN09 | 1.96 | 292 | 127 | EHT | SH | 0.048 | ✓ + | 0.011 | ✓ 3.14e+02 | 2.78e+01 |
| 15 | NN17 | 1.55 | 246 | 136 | EHU | P | -0.001 | ✓ + | | ✓ 1.82e+01 | 2.34e+01 |

| | Sta | Type | Penalty |
|---|---|---|---|
| 1 | NM03 | ☐ P:SH | |
| 2 | NM06 | ☐ P:SV | |
| 3 | NM42 | ☐ P:SV | |
| 4 | NM42 | ☐ P:SH | |
| 5 | NM42 | ✓ SV:SH | |
| 6 | NN07 | ☐ P:SH | |
| 7 | NN09 | ✓ P:SV | 0.010 |
| 8 | NN09 | ✓ P:SH | 0.061 |
| 9 | NN09 | ☐ SV:SH | |
| 10 | NN17 | ✓ P:SV | 0.018 |
| 11 | NN17 | ✓ P:SH | 0.000 |
| 12 | NN17 | ✓ SV:SH | 0.035 |
| 13 | NN18 | ☐ P:SV | |
| 14 | NN18 | ✓ P:SH | |
| 15 | NN18 | ☐ SV:SH | |

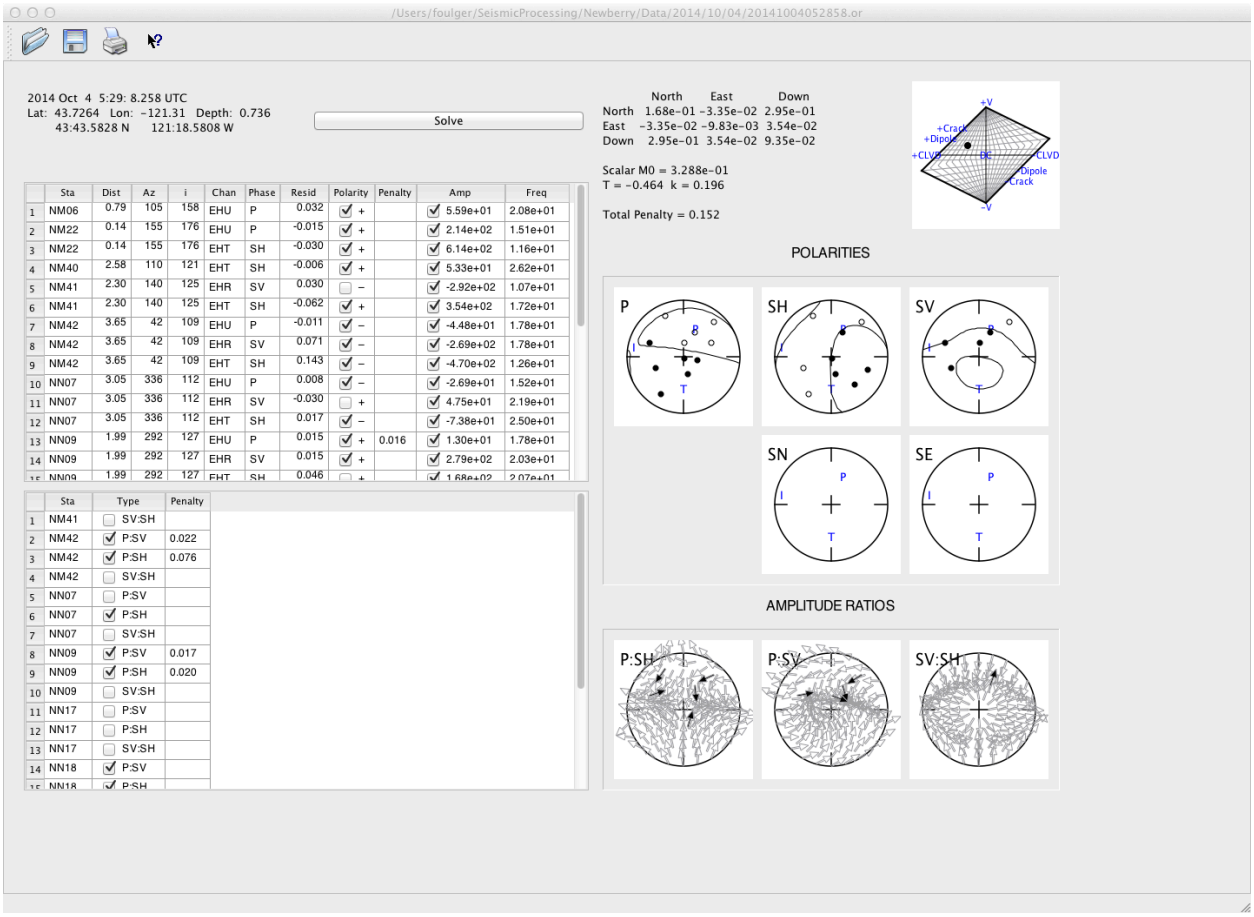


| | Sta | Dist | Az | i | Chan | Phase | Resid | Polarity | Penalty | Amp | Freq |
|---|---|---|---|---|---|---|---|---|---|---|---|
| 1 | NM06 | 0.79 | 105 | 158 | EHU | P | 0.032 | ✓ + | | ✓ 5.59e+01 | 2.08e+01 |
| 2 | NM22 | 0.14 | 155 | 176 | EHU | P | -0.015 | ✓ + | | ✓ 2.14e+02 | 1.51e+01 |
| 3 | NM22 | 0.14 | 155 | 176 | EHT | SH | -0.030 | ✓ + | | ✓ 6.14e+02 | 1.16e+01 |
| 4 | NM40 | 2.58 | 110 | 121 | EHT | SH | -0.006 | ✓ + | | ✓ 5.33e+01 | 2.62e+01 |
| 5 | NM41 | 2.30 | 140 | 125 | EHR | SV | 0.030 | ☐ − | | ✓ -2.92e+02 | 1.07e+01 |
| 6 | NM41 | 2.30 | 140 | 125 | EHT | SH | -0.062 | ✓ + | | ✓ 3.54e+02 | 1.72e+01 |
| 7 | NM42 | 3.65 | 42 | 109 | EHU | P | -0.011 | ✓ − | | ✓ -4.48e+01 | 1.78e+01 |
| 8 | NM42 | 3.65 | 42 | 109 | EHR | SV | 0.071 | ✓ − | | ✓ -2.69e+02 | 1.78e+01 |
| 9 | NM42 | 3.65 | 42 | 109 | EHT | SH | 0.143 | ✓ − | | ✓ -4.70e+02 | 1.26e+01 |
| 10 | NN07 | 3.05 | 336 | 112 | EHU | P | 0.008 | ✓ − | | ✓ -2.69e+01 | 1.52e+01 |
| 11 | NN07 | 3.05 | 336 | 112 | EHR | SV | -0.030 | ☐ + | | ✓ 4.75e+01 | 2.19e+01 |
| 12 | NN07 | 3.05 | 336 | 112 | EHT | SH | 0.017 | ✓ − | | ✓ -7.38e+01 | 2.50e+01 |
| 13 | NN09 | 1.99 | 292 | 127 | EHU | P | 0.015 | ✓ + | 0.016 | ✓ 1.30e+01 | 1.78e+01 |
| 14 | NN09 | 1.99 | 292 | 127 | EHR | SV | 0.015 | ✓ + | | ✓ 2.79e+02 | 2.03e+01 |
| 15 | NN09 | 1.99 | 292 | 127 | EHT | SH | 0.046 | ☐ + | | ✓ 1.68e+02 | 2.07e+01 |

| | Sta | Type | Penalty |
|---|---|---|---|
| 1 | NM41 | ☐ SV:SH | |
| 2 | NM42 | ✓ P:SV | 0.022 |
| 3 | NM42 | ✓ P:SH | 0.076 |
| 4 | NM42 | ☐ SV:SH | |
| 5 | NN07 | ☐ P:SV | |
| 6 | NN07 | ✓ P:SH | |
| 7 | NN07 | ☐ SV:SH | |
| 8 | NN09 | ✓ P:SV | 0.017 |
| 9 | NN09 | ✓ P:SH | 0.020 |
| 10 | NN09 | ☐ SV:SH | |
| 11 | NN17 | ☐ P:SV | |
| 12 | NN17 | ☐ P:SH | |
| 13 | NN17 | ☐ SV:SH | |
| 14 | NN18 | ✓ P:SV | |
| 15 | NN18 | ✓ P:SH | |

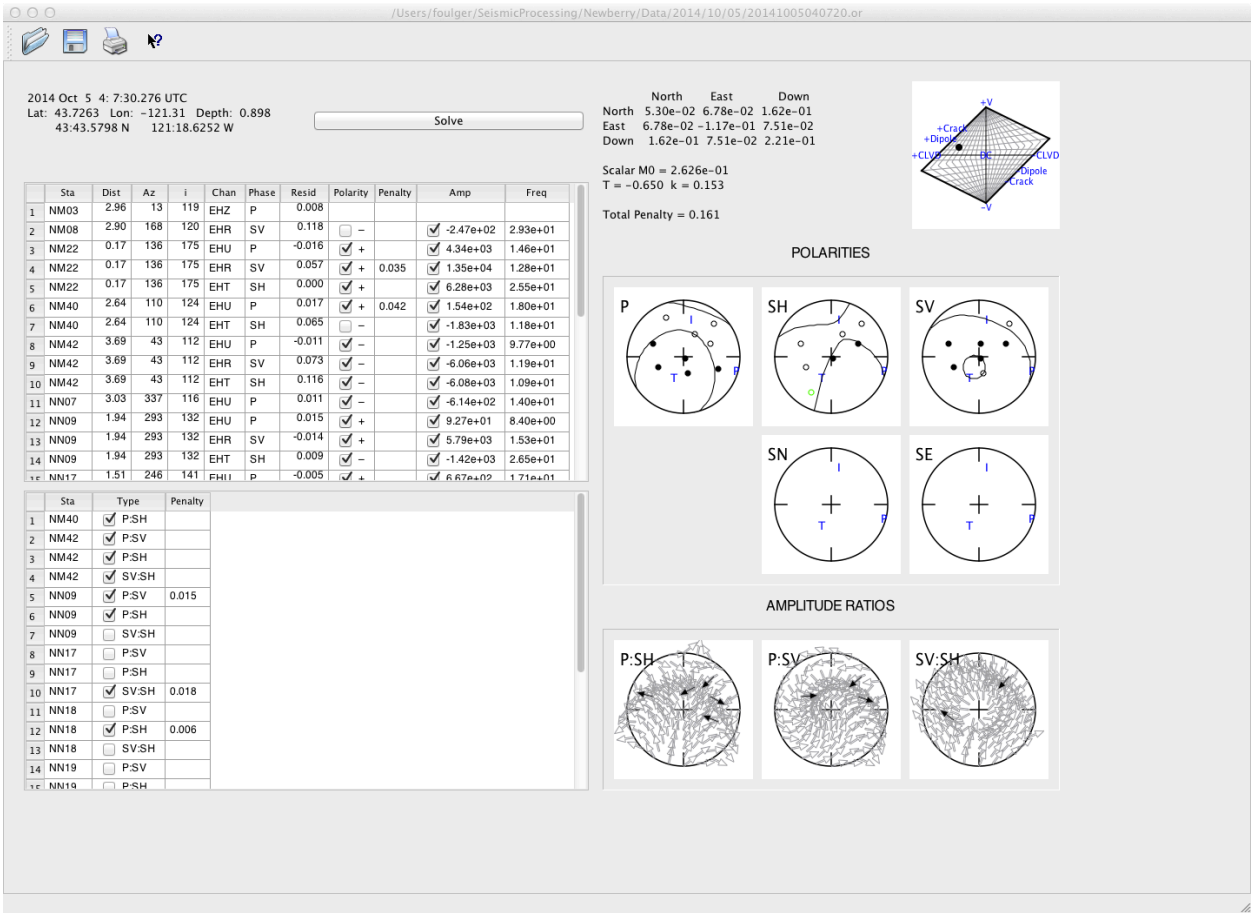


| | Sta | Dist | Az | i | Chan | Phase | Resid | Polarity | Penalty | Amp | Freq |
|---|---|---|---|---|---|---|---|---|---|---|---|
| 1 | NM03 | 2.96 | 13 | 119 | EHZ | P | 0.008 | | | | |
| 2 | NM08 | 2.90 | 168 | 120 | EHR | SV | 0.118 | ☐ − | | ☑ -2.47e+02 | 2.93e+01 |
| 3 | NM22 | 0.17 | 136 | 175 | EHU | P | -0.016 | ☑ + | | ☑ 4.34e+03 | 1.46e+01 |
| 4 | NM22 | 0.17 | 136 | 175 | EHR | SV | 0.057 | ☑ + | 0.035 | ☑ 1.35e+04 | 1.28e+01 |
| 5 | NM22 | 0.17 | 136 | 175 | EHT | SH | 0.000 | ☑ + | | ☑ 6.28e+03 | 2.55e+01 |
| 6 | NM40 | 2.64 | 110 | 124 | EHU | P | 0.017 | ☑ + | 0.042 | ☑ 1.54e+02 | 1.80e+01 |
| 7 | NM40 | 2.64 | 110 | 124 | EHT | SH | 0.065 | ☐ − | | ☑ -1.83e+03 | 1.18e+01 |
| 8 | NM42 | 3.69 | 43 | 112 | EHU | P | -0.011 | ☑ − | | ☑ -1.25e+03 | 9.77e+00 |
| 9 | NM42 | 3.69 | 43 | 112 | EHR | SV | 0.073 | ☑ − | | ☑ -6.06e+03 | 1.19e+01 |
| 10 | NM42 | 3.69 | 43 | 112 | EHT | SH | 0.116 | ☑ − | | ☑ -6.08e+03 | 1.09e+01 |
| 11 | NN07 | 3.03 | 337 | 116 | EHU | P | 0.011 | ☑ − | | ☑ -6.14e+02 | 1.40e+01 |
| 12 | NN09 | 1.94 | 293 | 132 | EHU | P | 0.015 | ☑ + | | ☑ 9.27e+01 | 8.40e+00 |
| 13 | NN09 | 1.94 | 293 | 132 | EHR | SV | -0.014 | ☑ + | | ☑ 5.79e+03 | 1.53e+01 |
| 14 | NN09 | 1.94 | 293 | 132 | EHT | SH | 0.009 | ☑ − | | ☑ -1.42e+03 | 2.65e+01 |
| 15 | NN17 | 1.51 | 246 | 141 | EHU | P | -0.005 | ☑ + | | ☑ 6.67e+02 | 1.71e+01 |

| | Sta | Type | Penalty |
|---|---|---|---|
| 1 | NM40 | ☑ P:SH | |
| 2 | NM42 | ☑ P:SV | |
| 3 | NM42 | ☑ P:SH | |
| 4 | NM42 | ☑ SV:SH | |
| 5 | NN09 | ☑ P:SV | 0.015 |
| 6 | NN09 | ☑ P:SH | |
| 7 | NN09 | ☐ SV:SH | |
| 8 | NN17 | ☐ P:SV | |
| 9 | NN17 | ☐ P:SH | |
| 10 | NN17 | ☑ SV:SH | 0.018 |
| 11 | NN18 | ☐ P:SV | |
| 12 | NN18 | ☑ P:SH | 0.006 |
| 13 | NN18 | ☐ SV:SH | |
| 14 | NN19 | ☐ P:SV | |
| 15 | NN19 | ☐ P:SH | |

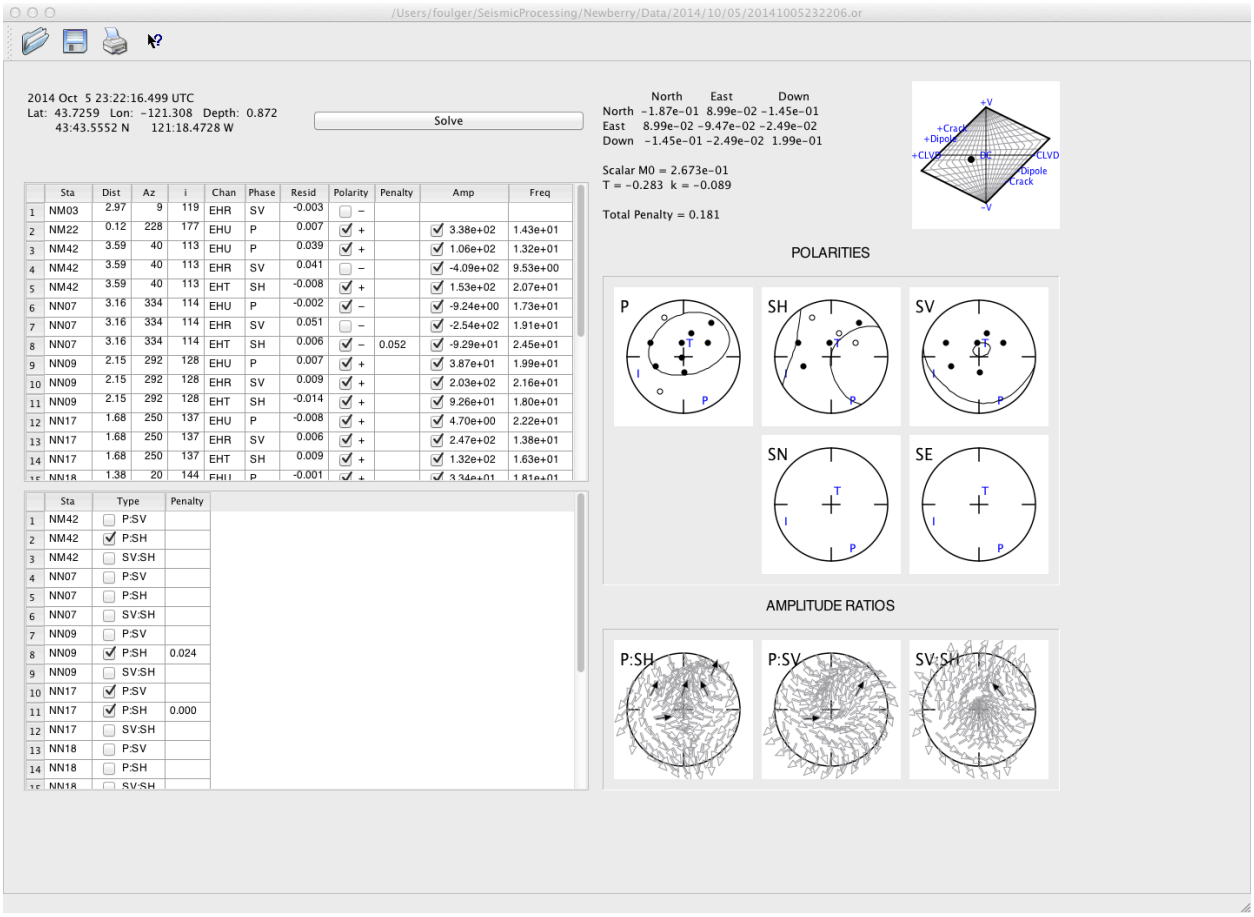


| | Sta | Dist | Az | i | Chan | Phase | Resid | Polarity | Penalty | Amp | Freq |
|---|---|---|---|---|---|---|---|---|---|---|---|
| 1 | NM03 | 2.97 | 9 | 119 | EHR | SV | -0.003 | ☐ – | | | |
| 2 | NM22 | 0.12 | 228 | 177 | EHU | P | 0.007 | ☑ + | | ☑ 3.38e+02 | 1.43e+01 |
| 3 | NM42 | 3.59 | 40 | 113 | EHU | P | 0.039 | ☑ + | | ☑ 1.06e+02 | 1.32e+01 |
| 4 | NM42 | 3.59 | 40 | 113 | EHR | SV | 0.041 | ☐ – | | ☑ -4.09e+02 | 9.53e+00 |
| 5 | NM42 | 3.59 | 40 | 113 | EHT | SH | -0.008 | ☑ + | | ☑ 1.53e+02 | 2.07e+01 |
| 6 | NN07 | 3.16 | 334 | 114 | EHU | P | -0.002 | ☑ – | | ☑ -9.24e+00 | 1.73e+01 |
| 7 | NN07 | 3.16 | 334 | 114 | EHR | SV | 0.051 | ☐ – | | ☑ -2.54e+02 | 1.91e+01 |
| 8 | NN07 | 3.16 | 334 | 114 | EHT | SH | 0.006 | ☑ – | 0.052 | ☑ -9.29e+01 | 2.45e+01 |
| 9 | NN09 | 2.15 | 292 | 128 | EHU | P | 0.007 | ☑ + | | ☑ 3.87e+01 | 1.99e+01 |
| 10 | NN09 | 2.15 | 292 | 128 | EHR | SV | 0.009 | ☑ + | | ☑ 2.03e+02 | 2.16e+01 |
| 11 | NN09 | 2.15 | 292 | 128 | EHT | SH | -0.014 | ☑ + | | ☑ 9.26e+01 | 1.80e+01 |
| 12 | NN17 | 1.68 | 250 | 137 | EHU | P | -0.008 | ☑ + | | ☑ 4.70e+00 | 2.22e+01 |
| 13 | NN17 | 1.68 | 250 | 137 | EHR | SV | 0.006 | ☑ + | | ☑ 2.47e+02 | 1.38e+01 |
| 14 | NN17 | 1.68 | 250 | 137 | EHT | SH | 0.009 | ☑ + | | ☑ 1.32e+02 | 1.63e+01 |
| 15 | NN18 | 1.38 | 20 | 144 | EHU | P | -0.001 | ☑ + | | ☑ 3.34e+01 | 1.81e+01 |

| | Sta | Type | Penalty |
|---|---|---|---|
| 1 | NM42 | ☐ P:SV | |
| 2 | NM42 | ☑ P:SH | |
| 3 | NM42 | ☐ SV:SH | |
| 4 | NN07 | ☐ P:SV | |
| 5 | NN07 | ☐ P:SH | |
| 6 | NN07 | ☐ SV:SH | |
| 7 | NN09 | ☐ P:SV | |
| 8 | NN09 | ☑ P:SH | 0.024 |
| 9 | NN09 | ☐ SV:SH | |
| 10 | NN17 | ☑ P:SV | |
| 11 | NN17 | ☑ P:SH | 0.000 |
| 12 | NN17 | ☐ SV:SH | |
| 13 | NN18 | ☐ P:SV | |
| 14 | NN18 | ☐ P:SH | |
| 15 | NN18 | ☐ SV:SH | |